FITTING SHOP

EXPERIMENT NO.:1

Aim: To study various tools and operations used in fitting shop.

Introduction:
Machine tools are capable of producing work at a faster rate, but, there are occasions when components are processed at the bench. Sometimes, it becomes necessary to replace or repair component which must be fit accurately with another component on reassembly. This involves a certain amount of hand fitting. The assembly of machine tools, jigs, gauges, etc, involves certain amount of bench work. The accuracy of work done depends upon the experience and skill of the fitter. The term 'bench work' refers to the production of components by hand on the bench, whereas fitting deals which the assembly of mating parts, through removal of metal, to obtain the required fit. Both the bench work and fitting requires the use of number of simple hand tools and considerable manual efforts. The operations in the above works consist of filing, chipping, scraping, sawing drilling, and tapping.

Holding Tools:
Bench vice
The bench vice is a work holding device. It is the most commonly used vice in a fitting shop. The bench vice is shown in Figure.

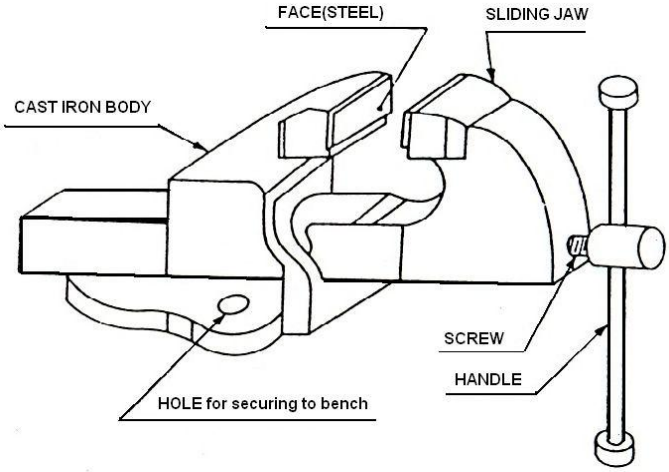

Bench Vice

It is fixed to the bench with bolts and nuts. The vice body consists of two main parts, fixed jaw and movable jaw. When the vice handle is turned in a clockwise direction, the sliding jaw forces the work against the fixed jaw. Jaw plates are made of hardened steel. Serrations on the jaws ensure a good grip.

V-block
V-block is rectangular or square block with a V-groove on one or both sides opposite to each other. The angle of the 'V' is usually 90^0. V-block with a clamp is used to hold cylindrical work securely.

C-Clamp

This is used to hold work against an angle plate or v-block or any other surface, when gripping is required. Its fixed jaw is shaped like English alphabet 'C' and the movable jaw is round in shape and directly fitted to the threaded screw at the end.

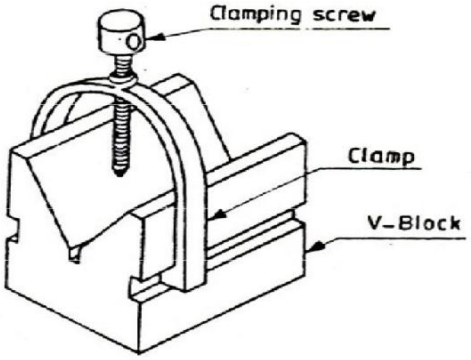

V-Block

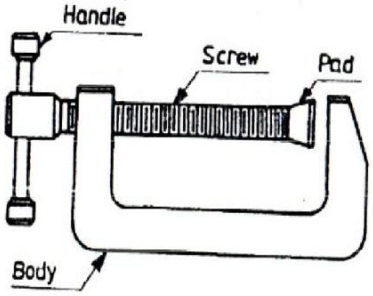

C-Clamp

Surface plate

The surface plate is machined to fine limits and is used for testing the flatness of the work piece. It is also used for marking out small box and is more precious than the marking table.

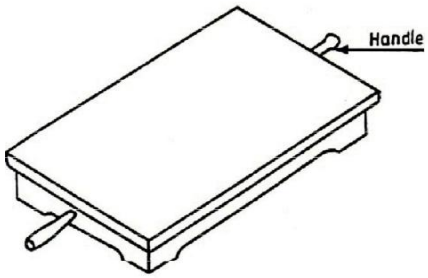

Surface Plate

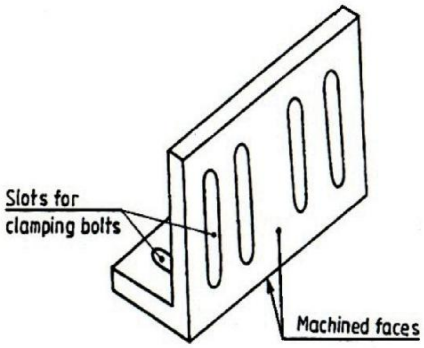

Angle Plate

Try square

It is measuring and marking tool for 90degree angle. In practice, it is used for checking the squareness of many types of small works when extreme accuracy is not required.

Scriber

A Scriber is a slender steel tool, used to scribe or mark lines on metal work pieces. It is made of hardened and tempered High Carbon Steel.

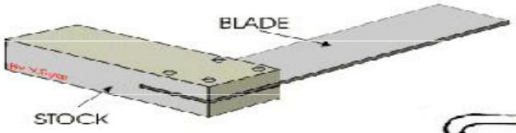

Try square

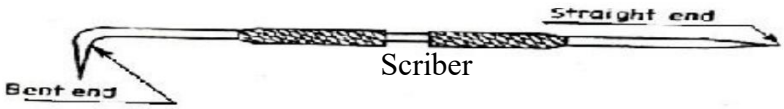

Scriber

Divider

It is basically similar to the calipers except that its legs are kept straight and pointed at the measuring edge. This is used for marking circles, arcs laying out perpendicular lines, by setting lines. It is made of case hardened mild steel or hardened and tempered low carbon steel. Its size is specified by the length of the leg**.**

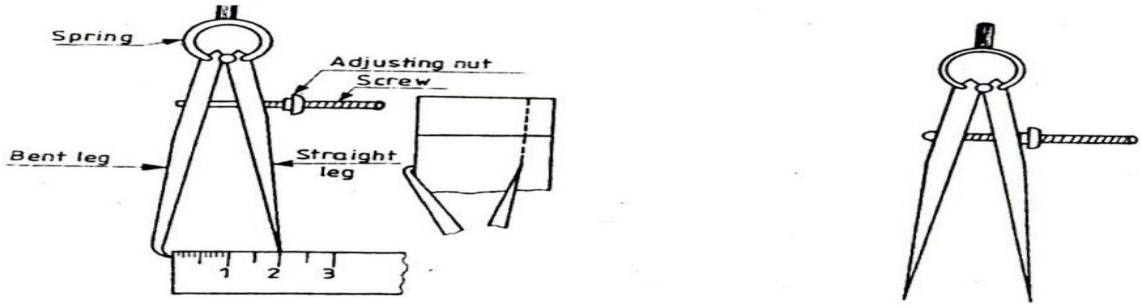

Divider

Trammel

Trammel is used for drawing large circles or arcs.

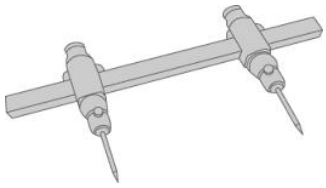

Trammel point

Punches

These are used for making indentations on the scribed lines, to make them visible clearly. These are made of high carbon steel. A punch is specified by its length and diameter (say as 150' 12.5mm).

Dot punch is used to lightly indent along the layout lines, to locate center of holes and to provide a small center mark for divider point, etc. for this purpose, the punch is ground to a conical point having 60° included angle.

Center punch is similar to the dot punch, except that it is ground to a conical point having 90° included angle. It is used to mark the location of the holes to be drilled.

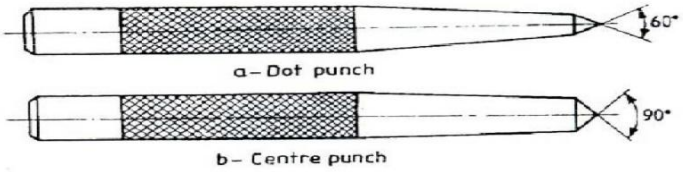

Calipers

They are indirect measuring tools used to measure or transfer linear dimensions. These are used with the help of a steel Rule to check inside and outside measurements.

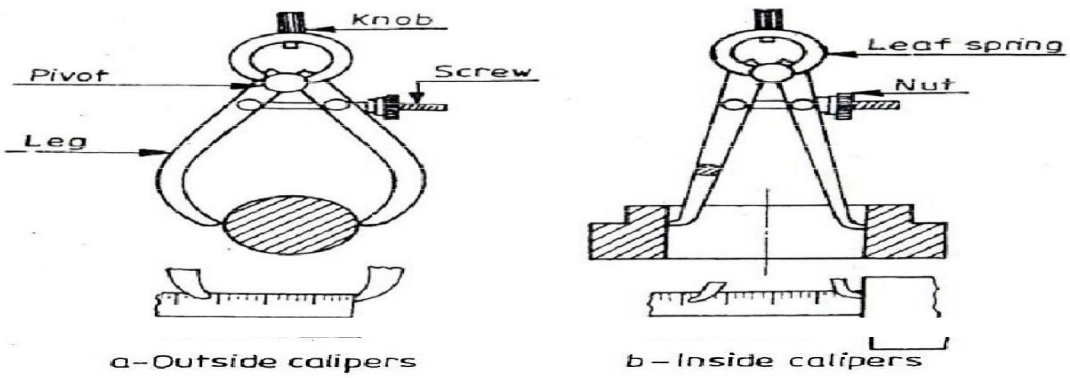

Vernier Calipers

These are used for measuring outside as well as inside dimensions accurately. It may also be used as a depth gauge. It has two jaws. One jaw is formed at one end of its main scale and the other jaw is made part of a vernier scale.

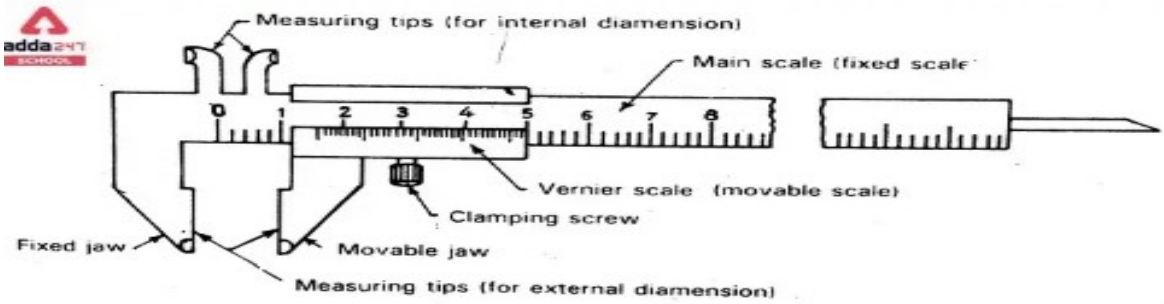

Vernier Caliper

Cutting Tools:

Hack Saw

The Hack Saw is used for cutting metal by hand. It consists of a frame, which holds a thin blade, firmly in position. Hacksaw blade is specified by the number of teeth for centimeter. Hacksaw blades have a number of teeth ranging from 5 to 15 per centimeter (cm). Blades having lesser number of teeth per cm are used for cutting soft materials like aluminum, brass and bronze. Blades having larger number of teeth per centimeter are used for cutting hard materials like steel and cast Iron.

Hacksaw blades are classified as (i) All hard and (ii) flexible type. The all hard blades are made of H.S.S, hardened and tempered throughout to retain their cutting edges longer. These are used to cut hard metals. These blades are hard and brittle and can break easily by twisting and forcing them into the work while sawing. Flexible blades are made of H.S.S or low alloy steel but only the teeth are hardened and the rest of the blade is soft and flexible. These are suitable for use by un-skilled or semi-skilled persons.

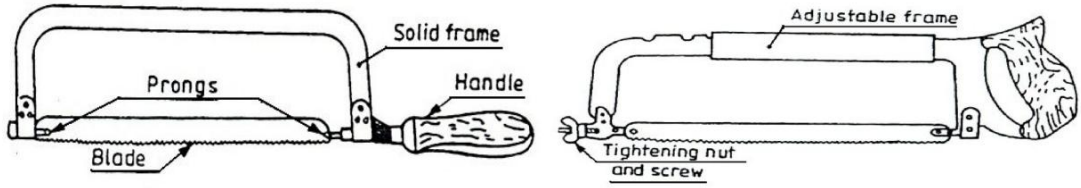

Hacksaw

Finishing Tools:

Reamers

Reaming is an operation of sizing and finishing a drilled hole, with the help of a cutting tool called reamer having a number of cutting edges. For this, a hole is first drilled, the size of which is slightly smaller than the finished size and then a hand reamer or machine reamer is used for finishing the hole to the correct size.

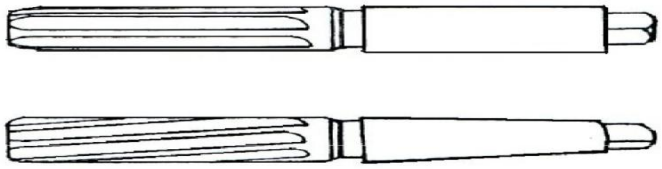

Reamers

Files

Filing is one of the methods of removing small amounts of material from the surface of a metal part. A file is hardened steel too, having small parallel rows of cutting edges or teeth on its surfaces. On the faces, the teeth are usually diagonal to the edge. One end of the file is shaped to fit into a wooden handle. The figure shows various parts of a hand file. The hand file is parallel in width and tapering slightly in thickness, towards the tip. It is provided with double cut teeth.

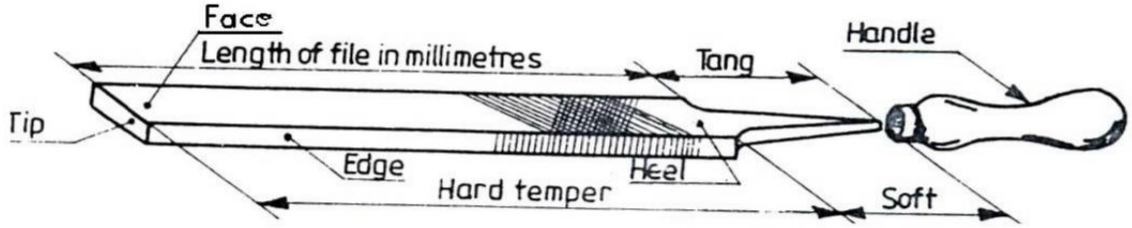

Files are classified according to their shape, cutting teeth and pitch or grade of the teeth. The figure shows the various types of files based on their shape.

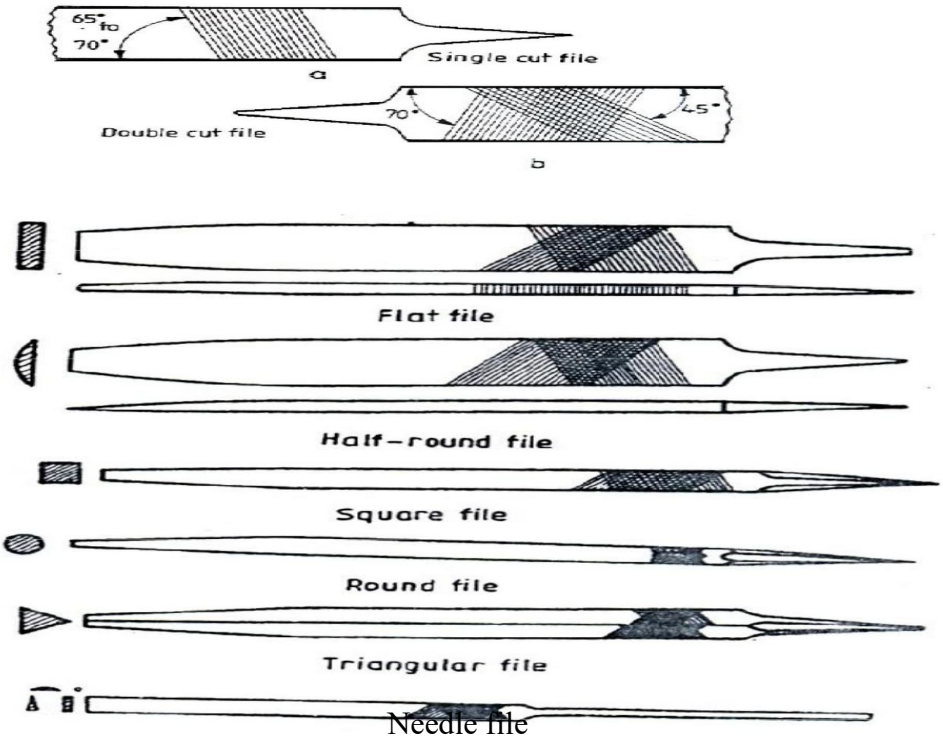

Ball- Peen Hammer

Ball- Peen Hammers are named, depending upon their shape and material and specified by their weight. A ball peen hammer has a flat face which is used for general work and a ball end, particularly used for riveting.

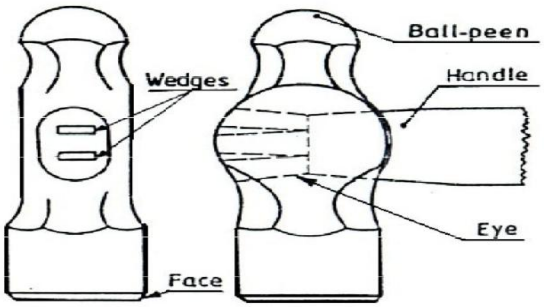

Ball peen hammer

Cross-Peen Hammer
It is similar to ball peen hammer, except the shape of the peen. This is used for chipping, riveting, bending and stretching metals and hammering inside the curves and shoulders.

Straight-Peen Hammer

This is similar to cross peen hammer, but its peen is in-line with the hammer handle. It is used for swaging, riveting in restricted places and stretching metals.

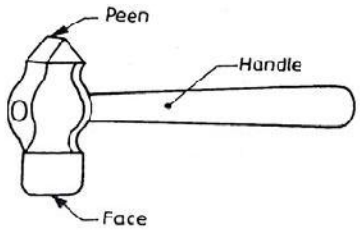

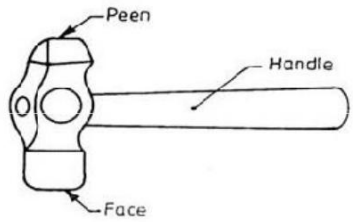

Straight peen hammer

EXPERIMENT NO.:2

Aim: To make a V-Shape job from a mild steel piece.

Materials required: Mild steel flat (50 X 50 X 5 mm^3).

Tools and equipment required: Try square, steel rule, scriber, hack saw frame, blades, square file, triangular file.

Sequence of Operations Used:

1. Measuring
2. Marking
3. Cutting
5. Filling
6. Finishing

Procedure:

1. Cut a piece of size 50X50X5 mm^3 from the M.S. flats using hand hacksaw.
2. The mild steel piece is checked for given dimensions.
3. One edge of job is filed to straightness with rough and smooth files and checked with try square.
4. Wet chalk is applied on one side of the flat and dried for marking.
5. Lines are marked according to given figure, using scriber and steel rule.
7. The material is cut along the inclined lines, to obtain V-shape, using hand hacksaw.
8. Finally buts are removed by the filling on the surface of the fitted job.

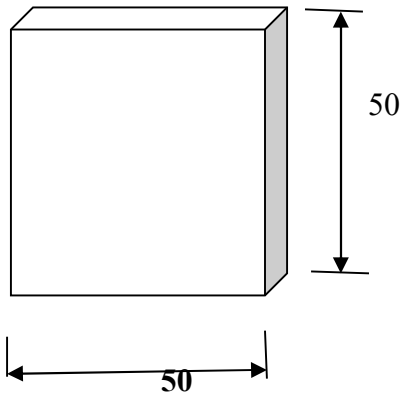

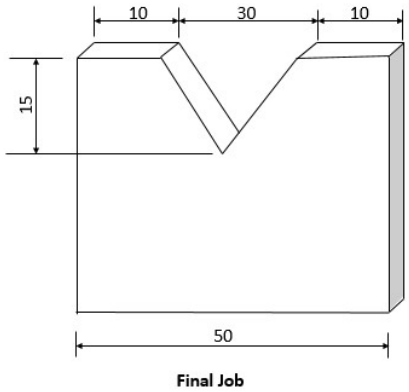

MS Raw Material

Precautions:

1. The perpendicularity of face ends edges is checked perfectly by using try square.

2. Finishing is given by using only with smooth files.

3. Marking is done without parallax error.

Result: The V-shaped job is produced successfully

Safe practice

The following are some of the safe and correct work practices in bench work and fitting shop, with respect to the tools used

1. Keep hands and tools wiped clean and free of dirt, oil and grease. Dry tools are safer to use than slippery tools.
2. Do not carry sharp tools on pockets.
3. Wear leather shoes and not sandals.
4. Don't wear loose clothes.
5. Do not keep working tools at the edge of the table.
6. Position the work piece such that the cut to be made is close to the vice. This practice prevents springing, saw breakage and personal injury.
7. Apply force only on the forward (cutting) stroke and relieve the force on the return stroke while sawing and filing.
8. Do not hold the work piece in hand while cutting.
9. Use the file with a properly fitted tight handle.

SHEET METAL SHOP

EXPERIMENT NO.-3

Aim: To study various tools and operations in sheet metal shop.

Introduction:

The metal plank having less than 2mm thick is called sheet metal. Sheet metal work deals with the production of components in wide variety of shapes and sizes with the aid of tools or machines.

Some of the important metals used in sheet metal work are described below.

Galvanized Iron: It is a sheet of soft steel, which is coated with zinc. Zinc resists corrosion and improves the appearance of the metal galvanized iron in one of the least expensive metals and is used for making pans, buckets, ducts, gutters, tanks, boxes, etc.

Black Iron: It is an uncoated sheet of metal with bluish- back appearance. It corrodes rapidly is not expensively due to difficulties of soldering the block iron sheet are used for parts that are to be painted.

Tin plate: Tin plate is an iron or steel coated with pure iron. It has very bright silver appearance and is used for food containers, cans, pans.

Stainless steels: It is an alloy steel possessing corrosion resistance. General type stainless steel contains 18 percent chromium and 8 percent nickel. This steel is commonly known as 18-8 stainless steel. These are available various sizes and thickness. It is widely used for food containers, dairy equipment.

Copper: It has reddish color and possesses good malleability, ductility and resistance to atmospheric corrosion.

Aluminum: Sheet aluminum is never pure aluminum and it is always allowed with small quantities of copper silicon, magnesium, and iron.

Tools and Equipment used in Sheet Metal

The common hand tools used in sheet metal work are steel rule, wire gauge, dot punch, trammels, scriber, ball peen hammer, straight –peen hammer, cross peen hammer, Nylon Mallets Hammer, Snips and Soldering Iron etc.

nips: Hand shear or snips are used to cut sheet metal. Although there are many types, the sheet metal works generally use straight snips and curved snips.

Straight Snips: Straight snips have straight blades and are used for cutting along the straight lines and for trimming edges.

Curved Snips / Bent Snip: Curved snips has a curved blade and used for cutting circles and irregular shapes.

Bench shears: Bench shear is used for cutting thick sheets. The lower fixed blade is firmly secured by bracket at bottom. The movable blade is pivoted at the rear end; the hand operating lever is attached to the front end of movable blade link mechanism.

Stakes: Stakes are made of steel and forged in a variety of shapes and sizes. Its working face is machined and polished to facilitate various operations such as bending, seaming or forming.

The following types of stakes are mostly used.

a. **Double seaming:** These stakes has two horns and it is used to make double seam for vessels.

b. **Blow horn:** These stakes have two horn tapering norms and it is used to forming or seaming funnels.

c. **Break horn:** These stakes have a square tapered horn on one side and a round tapered horn on opposite side. It is used for shaping round and square surfaces, bending edges, and making corners.

d. **Conductor stake:** These stakes has two cylindrical horns having different diameters. It is used for forming pipes and cylindrical pieces.

e. **Funnel stake:** It is used for forming conical shapes and for making wire rings.

f. **Hatchet stake:** It has a horizontal sharp straight edge and can be used for making straight sharp bends and for folding and bending edges.

g. **Square Stake**: It has a square straight edge and can be used for folding and bending of the sheet edges and for making right angle bends.

h. **Wire gauge:** The thickness of sheet metal is referred in number known as standard wire gauge. The gaps in the circumference of the gauge are used to check the gauge number as shown in figure.

i. **Sheet Metal Joints:** Various types of joints are used in sheet metal work to suit the varying requirements. Some commonly used sheet metal joints and folded edges are

shown below. These are self-secured joints, formed by joining together 2 pieces of sheet metal and using the metal itself to form the joint.

j. **Hand Hammers and Mallets:** The sheet metal worker uses a wide variety of hammers and mallet by forming shapes by different operations. The most commonly used hammers are follows.

k. **Straight-Peen Hammer:** It has a peen end similar to its bottom size round shape and its top side is straight point. Square, slightly curved face and its peen is tapered, it is used for riveting.

l. **Cross Peen Hammer:** It has a square flat face and it is tapered on one side. It is used for setting down the edges for making a double seam.

m. **Mallet:** Mallet is generally made of wood and Nylon. It is used whenever slight blows are required. Wooden and Nylon mallets don't damage the surface.

Wooden Mallet

Nylon Mallet

Trammel

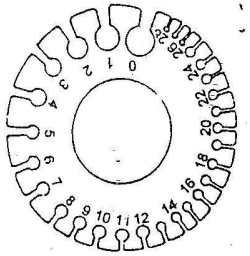

Standard Wire Gauge

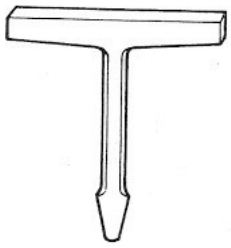

Square Stake

Hatchet Stake

Half Moon Stake

Funnel Stake

Bench Shear Machine

Straight Snip

Bent Snip

Bent Scriber

Straight Scriber

TYPES OF SEEMS AND FOLDED EDGES

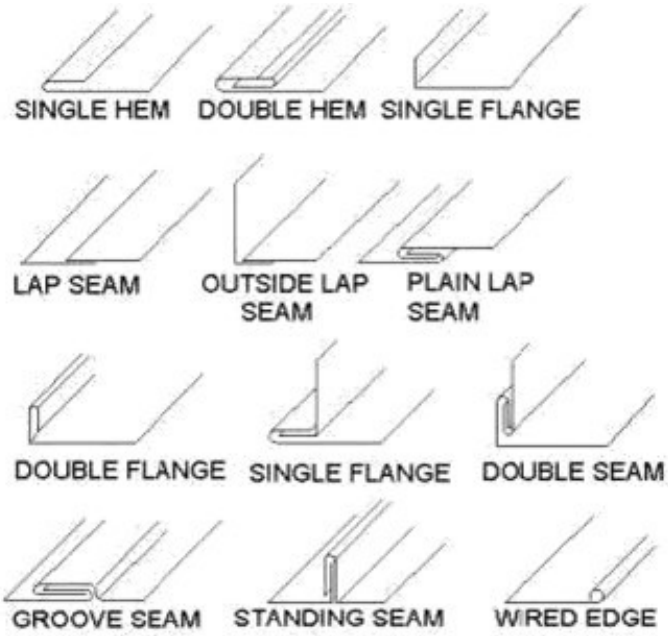

SAFETY PRECAUTIONS:

- Never carry tools in pockets.
- Do not try to hold the sheets with bare hands.
- Do not remove any guards on squaring shears.
- Care should be exercised when working on squaring shears.
- Be sure that the fingers are away from the shearing blade.
- Never use a soldering iron a loose handle.
- Never touch a soldering Iron to see its hotness.
- The melting of solder indicates the correct temperature.
- Be careful when cutting out a pattern. Remove scrap metal to avoid injuries.

Experiment No.-4

Aim: To make a rectangular tray of given dimensions from given metal sheet using various sheet metal operations.

Apparatus: Metal Sheet, Mattet, Shear and snip, Scribber, Steel Rule, Hand Vice and stakes

Theory: The material of the sheet used in making rectangular tray is galvanized iron. The rectangular is prepared using various sheet metal tools and operation as per procedure given below.

Diagram:

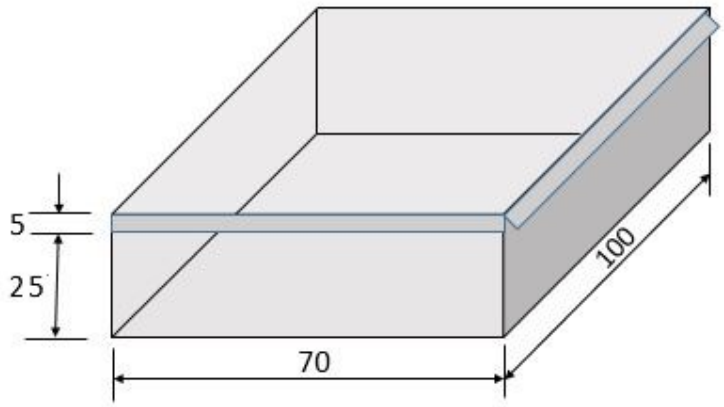

Rectangular Tray

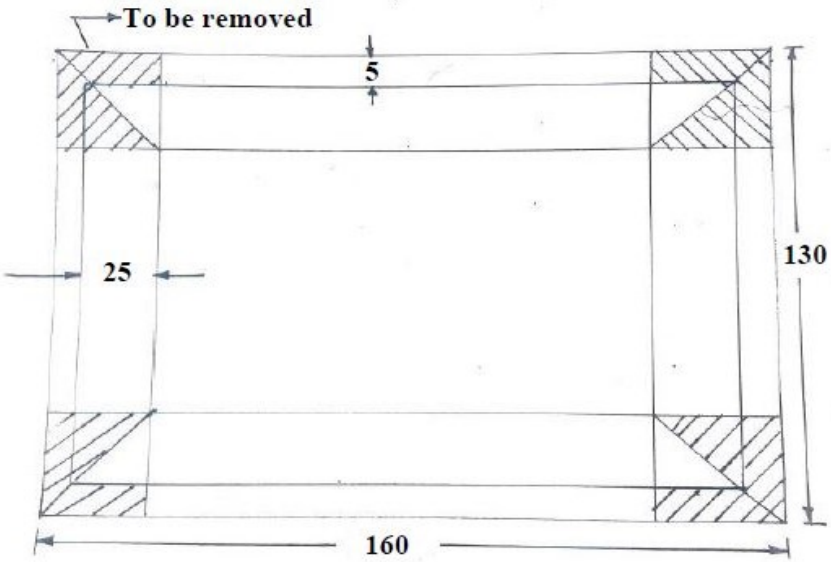

Note:All dimensions in MM.

Procedure:

1. Draw the development of the given job on the sheet with all allowances marked on it.
2. After the approval of development, trace it on metal sheet using scribber with allowances.
3. Cut the sheet using snip.
4. Make the notches as shown in development as per figure.
5. Bent the allowances at right angle on proper side using stake and mallet.
6. Bent the sheet at marked places to get four sides of rectangular tray.
7. Prepare the seam to lock the sides.

Result:

The rectangular tray of galvanized iron sheet has been prepared with given dimensions.

WELDING SHOP

EXPERIMENT No.-5

Aim: To study various tools and operations used in welding shop.

Introduction

Welding is the process of joining similar metals by the application of heat, with or without application of pressure or filler metal, in such a way that the joint is equivalent in composition and characteristics of the metals joined. In the beginning, welding was mainly used for repairing all kinds of worn or damaged parts. Now, it is extensively used in manufacturing industry, construction industry (construction of ships, tanks, locomotives and automobiles) and maintenance work, replacing riveting and bolting, to a greater extent.

The various welding processes are:

1. Electric arc welding,
2. Gas welding
3. Thermal welding
4. Electrical Resistance welding and
5. Friction welding

However, only electric arc welding process is discussed in the subject point of view.

Electric Arc Welding

Arc welding is the welding process, in which heat is generated by an electric arc struck between an electrode and the work piece. Electric arc is luminous electrical discharge between two electrodes through ionized gas

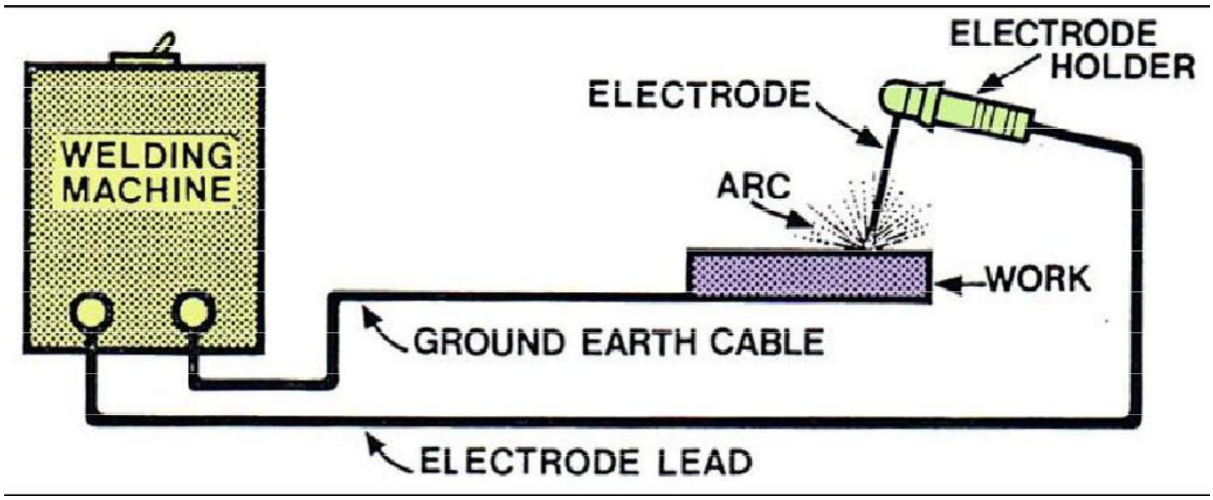

Arc welding set up.

Any arc welding method is based on an electric circuit consisting of the following parts:

a. Power supply (AC or DC);
b. Welding electrode;
c. Work piece;
d. Welding leads (electric cables) connecting the electrode and work piece to the power supply. Electric arc between the electrode and work piece closes the electric circuit. The

arc temperature may reach 10000°F (5500°C), which is sufficient for fusion the work piece edges and joining them. When a long joint is required the arc is moved along the joint line. The front edge of the weld pool melts the welded surfaces when the rear edge of the weld pool solidifies forming the joint. Transformers, motor generators and rectifiers' sets are used as arc welding machines. These machines supply high electric currents at low voltage and an electrode is used to produce the necessary arc. The electrode serves as the filler rod and the arc melts the surface so that, the metals to be joined are actually fixed together. Sizes of welding machines are rated according to their approximate amperage capacity at 60%duty cycle, such as 150,200,250,300,400,500 and 600 amperes.

Transformers

The transformers type of welding machine produces A.C current and is considered to be the least expensive. It takes power directly from power supply line and transforms it to the voltage required for welding.

Motor generators

These are D.C generators sets, in which electric motor and alternator are mounted on the same shaft to produce D.C power as pert the requirement for welding. These are designed to produce D.C current in either straight or reversed polarity. The polarity selected for welding depends upon the kind of electrode used and the material to be welded.

Rectifiers

These are essentially transformers, containing an electrical device which changes A.C into D.C by virtue of which the operator can use both types of power (A.C or D.C, but only one at a time). In addition to the welding machine, certain accessories are needed for carrying out the welding work.

Welding cables

Two welding cables are required, one from machine to the electrode holder and the other, from the machine to the ground clamp. Flexible cables are usually preferred because of the case of using and coiling the cables. Cables are specified by their current carrying capacity, say 300 A, 400 A, etc.

Electrodes

Filler rods are used in arc welding are called electrodes. These are made of metallic wire called core wire, having approximately the same composition as the metal to be welded. These are coated uniformly with a protective coating called flux. While fluxing an electrode; about 20mm of length is left at one end for holding it with the electrode holder. It helps in transmitting full current from electrode holder to the front end of the electrode coating. Flux acts as an insulator of electricity. Figure.4 shows the various parts of an electrode.

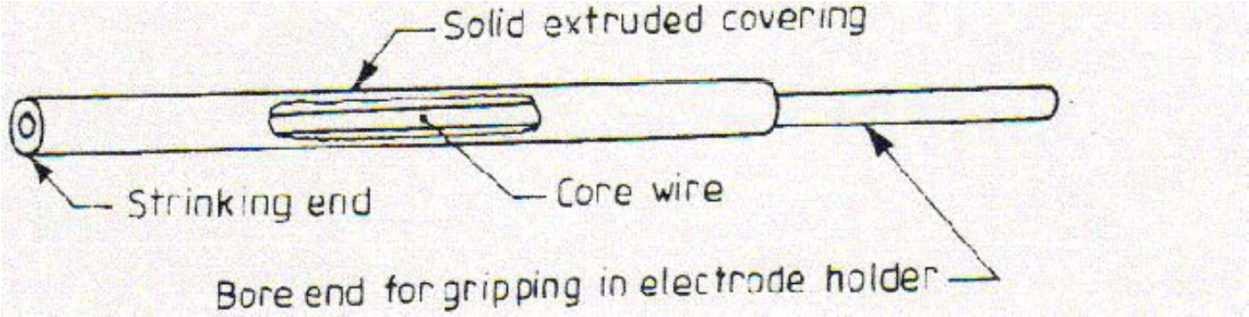

Parts of an electrode

In general, electrodes are classified into five main groups; mild steel, carbon steel, special alloy steel, cast iron and non-ferrous. The greatest range of arc welding is done with electrodes in the mild steel group. Various constituents like titanium oxide, potassium oxide, cellulose, iron or manganese, Ferro silicates, carbonates, gums, clays, asbestos, etc., are used as coatings on electrodes. While welding, the coating or flux vaporizes and provides a gaseous shield to prevent atmospheric attack. The size of electrode is measured and designated by the diameter of the core wire in SWG and length, apart from the brand and code names; indicating the purpose for which there are most suitable.

Welding Tools:
Electrode holder

The electrode holder is connected to the end of the welding cable and holds the electrode. It should be light, strong and easy to handle and should not become hot while in operation. Figure shows one type of electrode holder. The jaws of the holder are insulated, offering protection from electric shock.

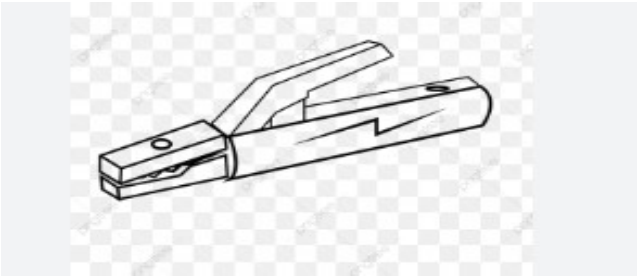

Electrode Holder

Wire brush and chipping hammer

A wire brush is used for cleaning and preparing the work for welding. A chipping hammer is used for removing slag formation on welds. One end of the head is sharpened like a cold chisel and the other, to a blunt, round point. It is generally made of tool steel. Molten metal dispersed around the welding heads, in the form of small drops, is known as spatter. When a flux coated electrode is used in welding process, then a layer of flux material is formed over the welding bead which contains the impurities of weld material.

This layer is known as slag. Removing the spatter and slag formed on and around the welding beads on the metal surface is known as chipping.

Wire brush

Chipping hammer

Face shield

A face shield is used to protect the eyes and face from the rays of the arc and from spatter or flying particles of hot metal. It is available either in hand or helmet type

Hand gloves
These are used to protect the hands from electric shocks and hot spatters

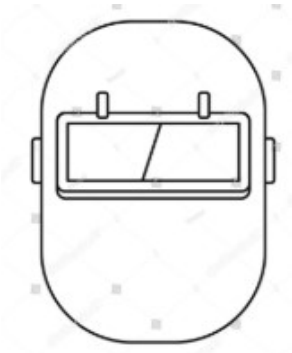

Face shield

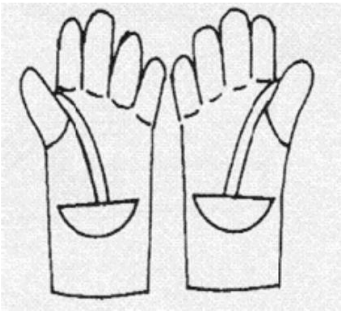

Hand-held type

Hand glov

Techniques of welding

Preparation of work
Before welding, the work pieces must be thoroughly cleaned of rust, scale and other foreign material. The piece for metal generally welded without beveling the edges, however, thick work piece should be beveled or veed out to ensure adequate penetration and fusion of all parts of the weld. But, in either case, the parts to be welded must be

separated slightly to allow better penetration of the weld. Before commencing the welding process, the following must be considered

a) Ensure that the welding cables are connected to proper power source.
b) Set the electrode, as per the thickness of the plate to be welded.
c) Set the welding current, as per the size of the electrode to be used.

NOTE: While making butt welds in thin metal, it is a better practice to tack-weld the pieces to hold them properly while welding.

Striking an arc

The following are the stages and methods of striking an arc and running a bead
a) Select an electrode of suitable kind and size for the work and set the welding current at a proper value.
b) Fasten the ground clamp to either the work or welding table.
c) Start or strike the arc by either of the following methods

Strike and withdraw
In this method the arc is started by moving the end of the electrode onto the work with a slow sweeping motion, similar to striking a match.

Touch and with draw
In this method, the arc is started by keeping the electrode perpendicular to the work and touching or bouncing it lightly on the work. This method is preferred as it facilitates restarting the momentarily broken arc quickly. If the electrode sticks to the work, quickly bend it back and forth, pulling at the same time. Make sure to keep the shield in front of the face, when the electrode is freed from sticking.

d) As soon as the arc is struck, move the electrode along, slowly from left to right, keeping at 15º to 25º from vertical and in the direction of welding. Strike and withdraw Touch and withdraw

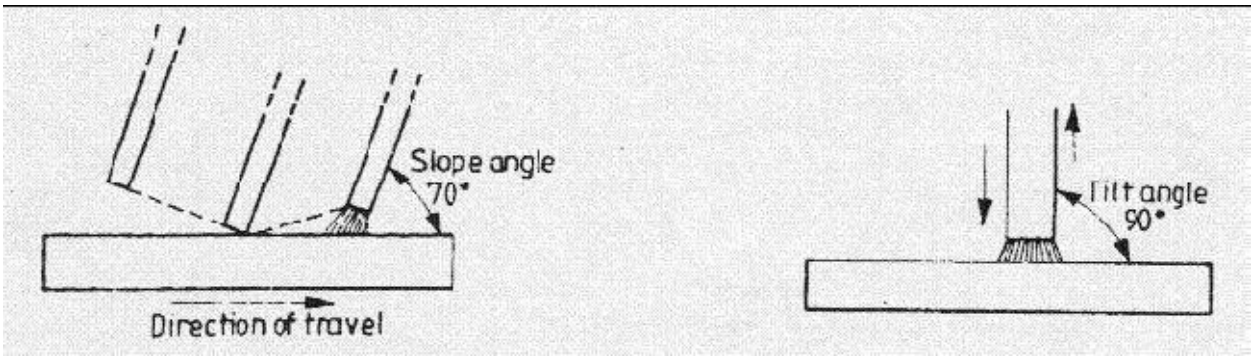

Striking an arc

TYPES OF JOINTS

Welds are made at the junction of the various pieces that make up the weldment. The junctions of parts, or joints, are defined as the location where two or more numbers are to be joined. Parts being joined to produce the weldment may be in the form of rolled plate, sheet, pipes, castings, forgings, or billets. The five basic types of joints are listed below.

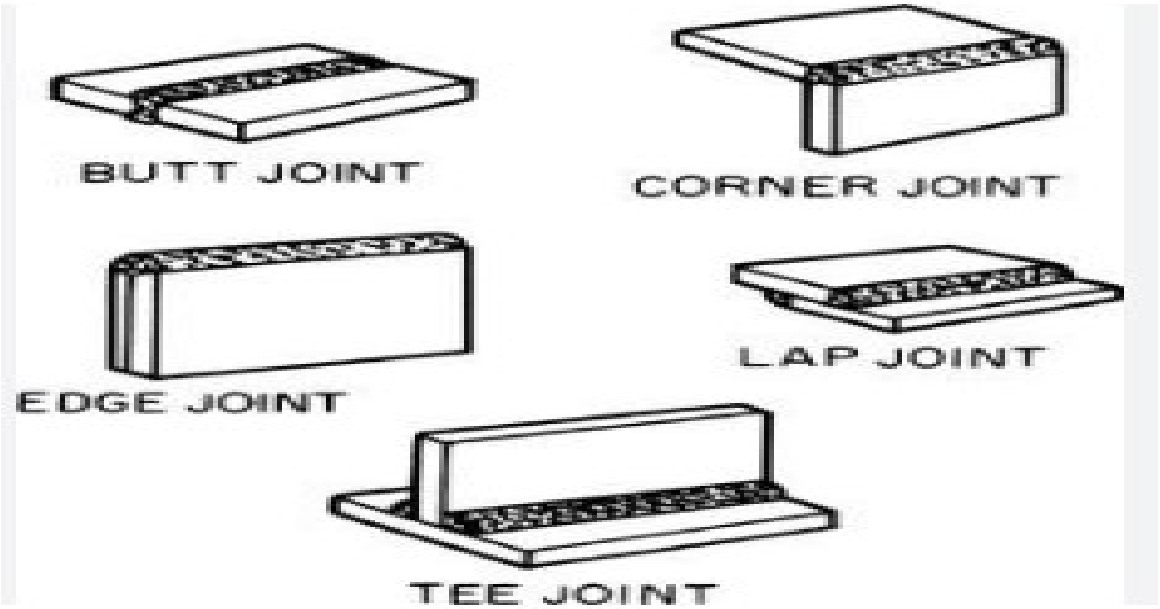

Types of welding joints.

EXPERIMENT No.-6

Aim: To make a Butt joint using the given two M.S pieces by arc welding.

Material Required:

Mild steel plate of size 50X50X5 mm^3 – 2 No's

Welding Electrodes: M.S electrodes 3.1 mm X350 mm

Welding Equipment: Air cooled transformer

Voltage-80 to 600 V 3 phase supply, amps up to 350

Tools and Accessories required: Hand hacksaw, rough and smooth files, Arc welding machine (transformer type), mild steel electrode and electrode holder, ground clamp, tongs, face shield, apron, chipping hammer, wire brush.

Sequence of operations used:
1. Measuring
2. Marking
3. Cutting
4. Edge preparation (Removal of rust, scale etc.) by filling
5. Try square leveling
6. Tacking
7. Welding
8. Cooling
9. Chipping
10. Cleaning

Procedure:
1. M.S pieces of size 50X50X5 mm^3 were cut from the M.S. flats using hand hacksaw.
2. One edge of each piece is beveled, to an angle of 30^0, leaving nearly ¼ th of the flat thickness, at one end.
3. The two pieces are positioned on the welding table such that, they are separated slightly for better penetration of the weld.
4. The electrode is fitted in the electrode holder and the welding current is set to be a proper value.
5. The ground clamp is fastened to the welding table.
6. Wearing the apron and using the face shield, the arc is struck and holding the two pieces together; first run of the weld is done to fill the root gap.
7. Second run of the weld is done with proper weaving and with uniform movement. During the process of welding, the electrode is kept at 15^0 to 25^0 from vertical and in the direction of welding.
8. The scale formation on the welds is removed by using the chipping hammer and wire brush.
9. Filing is done to remove any spatter around the weld.

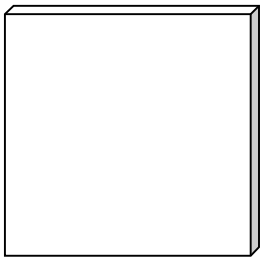

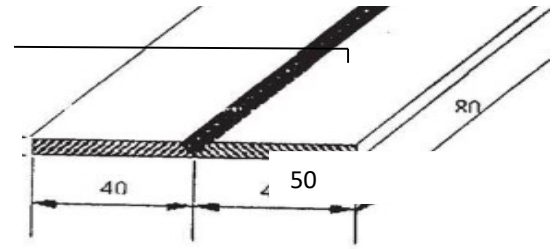

50 'V' Butt Joint

50X50X5 mm^3 – 2Nos

Result:
The single V-butt joint is thus made, using the tools and equipment as mentioned above.

SAFETY PRECAUTIONS
Always weld in a well ventilated place. Fumes given off from welding are unpleasant and in some cases may be injurious, particularly from galvanized or zinc coated parts.

1. Do not weld around combustible or inflammable materials, where sparks may cause a fire.
2. Never weld containers, which have been used for storing gasoline, oil or similar materials, without first having them thoroughly cleaned.
3. Check the welding machine to make sure that it is properly grounded and that all leads properly insulated.
4. Never look at the arc with the naked eye. The arc can burn your eyes severely. Always use a face shield while welding.
5. Prevent welding cables from coming in contact with hot metal, water, oil, or grease. Avoid dragging the cables around sharp corners.
6. Ensure proper insulation of the cables and check for openings.
7. Always wear the safety hand gloves, apron and leather shoes.
8. Always turn off the machine when leaving the work.
9. Apply eye drops after welding is over for the day, to relieve the strain on the eyes.
10. While welding, stand on dry footing and keep the body insulated from the electrode, any other parts of the electrode holder and the work.

EXPERIMENT No.-6

Aim: To make a Lap joint using the given two M.S pieces by arc welding.

Material Required:

Mild steel plate of size 50X50X5 mm^3 – 2 No's

Welding Electrodes: M.S electrodes 3.1 mm X350 mm

Welding Equipment: Air cooled transformer

Voltage-80 to 600 V 3 phase supply, amps up to 350

Tools and Accessories required: Hand hacksaw, rough and smooth files, Arc welding machine (transformer type), mild steel electrode and electrode holder, ground clamp, tongs, face shield, apron, chipping hammer, wire brush.

Sequence of operations used:
1. Measuring
2. Marking
3. Cutting
4. Edge preparation (Removal of rust, scale etc.) by filling
5. Try square leveling
6. Tacking
7. Welding
8. Cooling
9. Chipping
10. Cleaning

Procedure:
1. M.S pieces of size 50X50X5 mm^3 were cut from the M.S. flats using hand hacksaw.
3. The two pieces are positioned on the welding table such that, they are overlapping each other as shown in figure.
4. The electrode is fitted in the electrode holder and the welding current is set to be a proper value.
5. The ground clamp is fastened to the welding table.
6. Wearing the apron and using the face shield, the arc is struck and holding the two pieces together.
7. Welding is done with proper weaving and with uniform movement. During the process of welding, the electrode is kept at 15^0 to 25^0 from vertical and in the direction of welding.
8. The scale formation on the welds is removed by using the chipping hammer and wire brush.
9. Filing is done to remove any spatter around the weld.

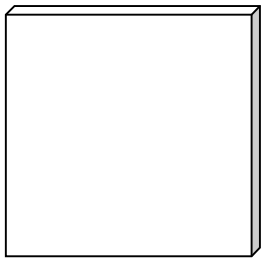

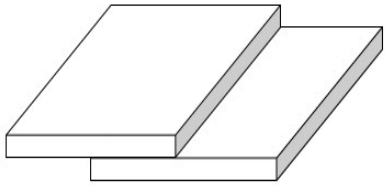

Overlapping Pieces

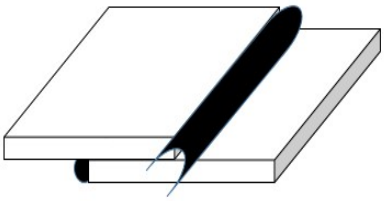

Lap Joint

50X50X5 mm^3 – 2Nos

Result:
The Lap joint is thus made, using the tools and equipment as mentioned above.

SAFETY PRECAUTIONS
Always weld in a well ventilated place. Fumes given off from welding are unpleasant and in some cases may be injurious, particularly from galvanized or zinc coated parts.

1. Do not weld around combustible or inflammable materials, where sparks may cause a fire.
2. Never weld containers, which have been used for storing gasoline, oil or similar materials, without first having them thoroughly cleaned.
3. Check the welding machine to make sure that it is properly grounded and that all leads properly insulated.
4. Never look at the arc with the naked eye. The arc can burn your eyes severely. Always use a face shield while welding.
5. Prevent welding cables from coming in contact with hot metal, water, oil, or grease. Avoid dragging the cables around sharp corners.
6. Ensure proper insulation of the cables and check for openings.
7. Always wear the safety hand gloves, apron and leather shoes.
8. Always turn off the machine when leaving the work.
9. Apply eye drops after welding is over for the day, to relieve the strain on the eyes.
10. While welding, stand on dry footing and keep the body insulated from the electrode, any other parts of the electrode holder and the work.

EXPERIMENT No.-6

Aim: To make a T - joint using the given two M.S pieces by arc welding.

Material Required:

Mild steel plates of size 50X50X5 mm^3 and 70X50X5 mm^3.

Welding Electrodes: M.S electrodes 3.1 mm X350 mm

Welding Equipment: Air cooled transformer

Voltage-80 to 600 V 3 phase supply, amps up to 350

Tools and Accessories required: Hand hacksaw, rough and smooth files, Arc welding machine (transformer type), mild steel electrode and electrode holder, ground clamp, tongs, face shield, apron, chipping hammer, wire brush.

Sequence of operations used:
1. Measuring
2. Marking
3. Cutting
4. Edge preparation (Removal of rust, scale etc.) by filling
5. Try square leveling
6. Tacking
7. Welding
8. Cooling
9. Chipping
10. Cleaning

Procedure:
1. M.S pieces of size 50X50X5 mm^3 and 50X50X5 mm^3 were cut from the M.S. flats using hand hacksaw.
3. The two pieces are positioned on the welding table such that they make T-shape as shown in figure.
4. The electrode is fitted in the electrode holder and the welding current is set to be a proper value.
5. The ground clamp is fastened to the welding table.
6. Wearing the apron and using the face shield, the arc is struck and holding the two pieces together.
7. Welding is done with proper weaving and with uniform movement. During the process of welding, the electrode is kept at 15^0 to 25^0 from vertical and in the direction of welding.
8. The scale formation on the welds is removed by using the chipping hammer and wire brush.

9. Filing is done to remove any spatter around the weld.

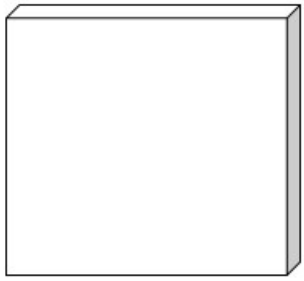

50x50 mm Piece

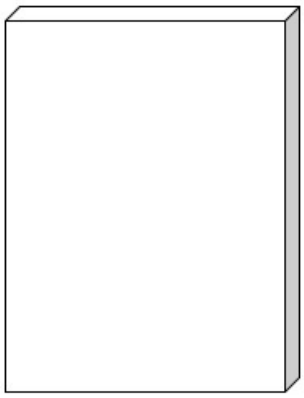

50x70 mm Piece

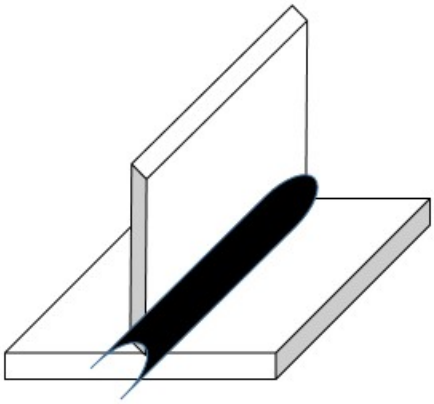

T- Joint

Result:

The T- joint is thus made, using the tools and equipment as mentioned above.

SAFETY PRECAUTIONS

Always weld in a well ventilated place. Fumes given off from welding are unpleasant and in some cases may be injurious, particularly from galvanized or zinc coated parts.

1. Do not weld around combustible or inflammable materials, where sparks may cause a fire.
2. Never weld containers, which have been used for storing gasoline, oil or similar materials, without first having them thoroughly cleaned.
3. Check the welding machine to make sure that it is properly grounded and that all leads properly insulated.
4. Never look at the arc with the naked eye. The arc can burn your eyes severely. Always use a face shield while welding.
5. Prevent welding cables from coming in contact with hot metal, water, oil, or grease. Avoid dragging the cables around sharp corners.
6. Ensure proper insulation of the cables and check for openings.
7. Always wear the safety hand gloves, apron and leather shoes.
8. Always turn off the machine when leaving the work.
9. Apply eye drops after welding is over for the day, to relieve the strain on the eyes.
10. While welding, stand on dry footing and keep the body insulated from the electrode, any other parts of the electrode holder and the work.

MACHINE SHOP

EXPERIMENT No.-7

Aim: To study various tools and operations in machine shop.

INTRODUCTION

In a machine shop, metals are cut to shape on different machine tools. A lathe is used to cut and shape the metal by revolving the work against a cutting tool. The work is clamped either in a chuck, fitted on to the lathe spindle or in-between the centers. The cutting tool is fixed in a tool post, mounted on a movable carriage that is positioned on the lathe bed. The cutting tool can be fed on to the work, either lengthwise or cross-wise. While turning, the chuck rotates in counter-clockwise direction, when viewed from the tail stock end.

PRINCIPAL PARTS OF A LATHE

Figure shows a center lathe, indicating the main parts. The name is due to the fact that work pieces are held by the centers.

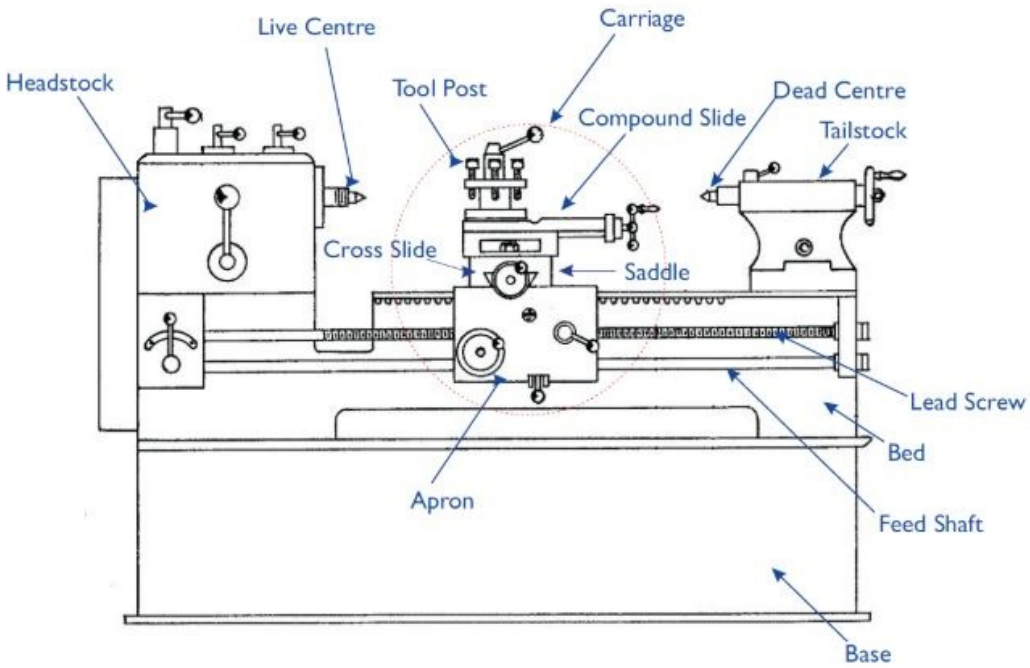

Parts of a center lathe

Bed

It is an essential part of a lathe, which must be strong and rigid. It carries all parts of the machine and resists the cutting forces. The carriage and the tail stock move along the guide ways provided on the bed. It is usually made of cast iron.

Head stock

It contains either a cone pulley or gearings to provide the necessary range of speeds and feeds. It contains the main spindle, to which the work is held and rotated.

Tail stock

It is used to support the right hand end of a long work piece. It may be clamped in any position along the lathe bed. The tail stock spindle has an internal Morse taper to receive the dead center

that supports the work. Drills, reamers, taps may also be fitted into the spindle, for performing operations such as drilling, reaming and tapping.

Carriage or Saddle

It is used to control the movement of the cutting tool. The carriage assembly consists of the longitudinal slide, cross slide and the compound slide and apron. The cross slide moves across the length of the bed and perpendicular to the axis of the spindle. This movement is used for facing and to provide the necessary depth of cut while turning. The apron, which is bolted to the saddle, is on the front of the lathe and contains the longitudinal and cross slide controls.

Compound Rest

It supports the tool post. By swiveling the compound rest on the cross slide, short tapers may be turned to any desired angles.

Tool Post

The tool post holds the tool holder or the tool, which may be adjusted to any working position.

Lead Screw

It is a long threaded shaft, located in front of the carriage, running from the head-stock to the tail stock. It is geared to the spindle and controls the movement of the tool, either for automatic feeding or for cutting threads.

Centers

There are two centers known as dead center and live center. The dead center is positioned in the tail stock spindle and the live center, in the head-stock spindle. While turning between centers, the dead center does not revolve with the work while the live center revolves with the work.

Work Holding Devices

Three jaw chuck

It is a work holding device having three jaws (self-centering) which will close or open with respect to the chuck center or the spindle center, as shown in figure. It is used for holding regular objects like round bars, hexagonal rods, etc.

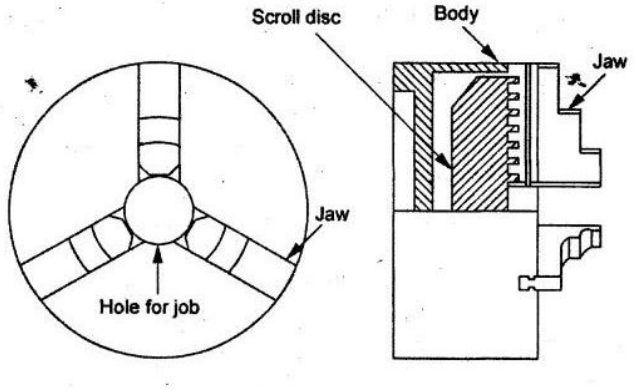

Three Jaw Chuck

Four jaw chuck

A four-jaw chuck on a lathe machine is a workholding device with four independent jaws, allowing it to securely hold and precisely center irregularly shaped workpieces like squares, hexagons, or other non-cylindrical objects, offering greater versatility compared to a standard three-jaw chuck which is primarily used for round stock; each jaw on a four-jaw chuck can be adjusted individually for precise alignment and clamping of complex shapes.

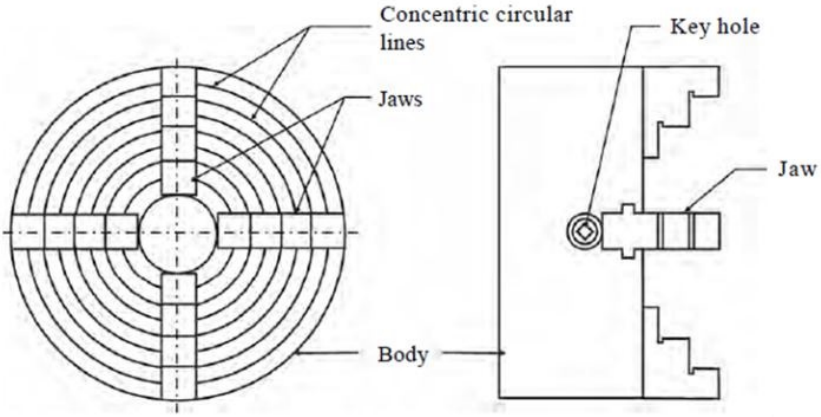

Four Jaw Chuck

Face plate

It is a plate of large diameter, used for turning operations. Certain types of work that cannot be held in chucks are held on the face plate with the help of various accessories.

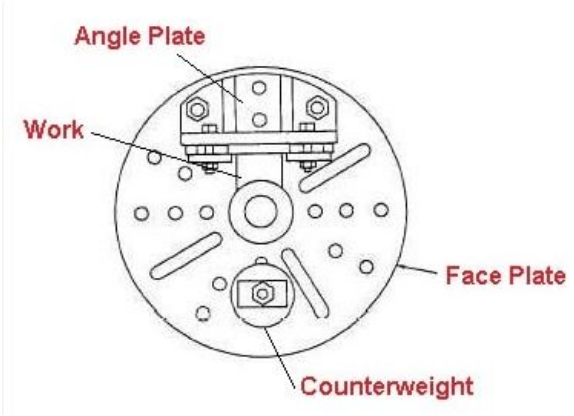

Face Plate

Lathe dogs and driving plate

These are used to drive a work piece that is held between centers. These are provided with an opening to receive and clamp the work piece and dog tail, the tail of the dog is carried by the pin provided in the driving plate for driving the work piece.

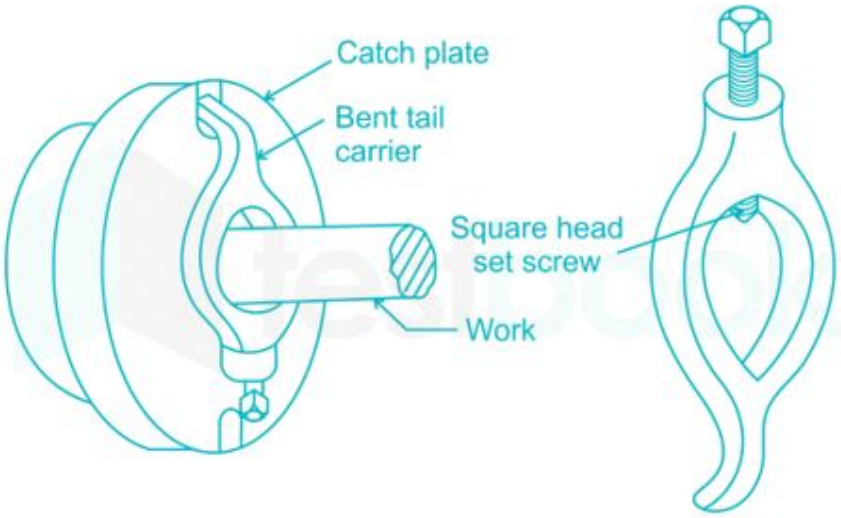

Driving Plate and Lathe Dog

CUTTING PARAMETERS

Cutting speed

It is defined as the speed at which the material is removed and is specified in meters per minute. Ti depends upon the work piece material, feed, depth of cut, type of operation and so many other cutting conditions. It is calculated from the relation,

Spindle speed (RPM) = cutting speed x 1000 / (πD)
Where D is the work piece diameter in mm.

Feed

It is the distance traversed by the tool along the bed, during one revolution of the work. Its value depends upon the depth of cut and surface finish of the work desired.

Depth of Cut

It is the movement of the tip of the cutting tool, from the surface of the work piece and perpendicular to the lathe axis. Its value depends upon the nature of operation like rough turning or finish turning.

Tool Materials

General purpose hand cutting tools are usually made from carbon steel or tool steel. The single point lathe cutting tools are made of high speed steel (HSS).the main alloying elements in 18 4 1 HSS tools are 18 percent tungsten, 4 percent chromium and 1 percent vanadium.5 to 10 percent cobalt is also added to improve the heat resisting properties of the tool. Carbide tipped tools fixed in tool holders, are mostly used in production shops.

LATHE OPERATIONS

Turning

Cylindrical shapes, both external and internal, are produced by turning operation. Turning is the process in which the material is removed by a traversing cutting tool, from the surface of a rotating work piece.

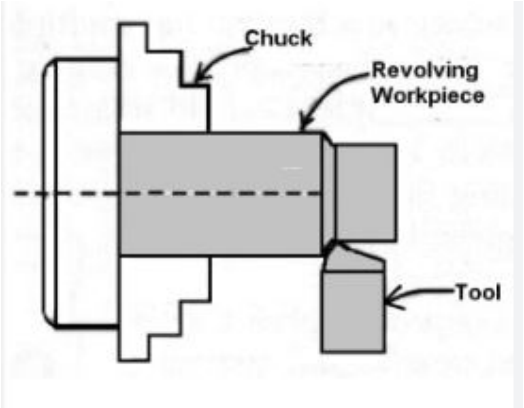

Turning

Boring

Boring is enlarging a hole and is used when correct size drill is not available. However, it should be noted that boring cannot make a hole.

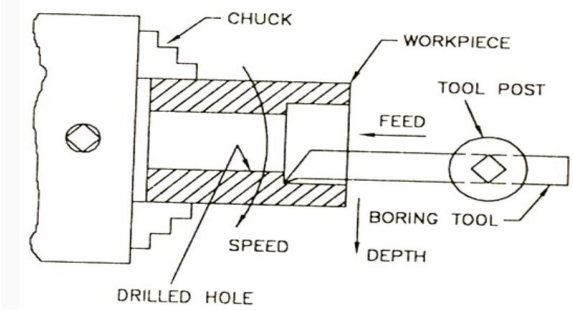

Boring

Facing

Facing is a machining operation, performed to make the end surface of the work piece, flat and perpendicular to the axis of rotation. For this, the work piece may be held in a chuck and rotated about the lathe axis.

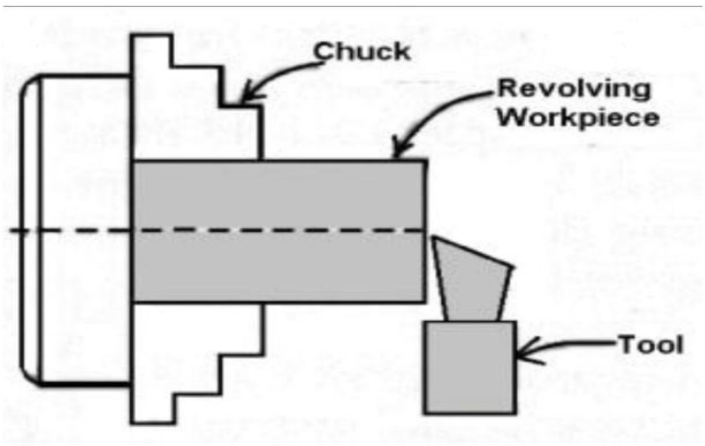

Facing

Taper Turning

A taper is defined as the uniform change in the diameter of a work piece, measured along its length. It is expressed as a ratio of the difference in diameters to the length. It is also expressed in degrees of half the included (taper) angle. Taper turning refers to the production of a conical surface, on the work piece on a lathe. Short steep tapers may be cut on a lathe by swiveling the compound rest to the required angle. Here, the cutting tool is fed by means of the compound slide feed handle. The work piece is rotated in a chuck or face plate or between centers.

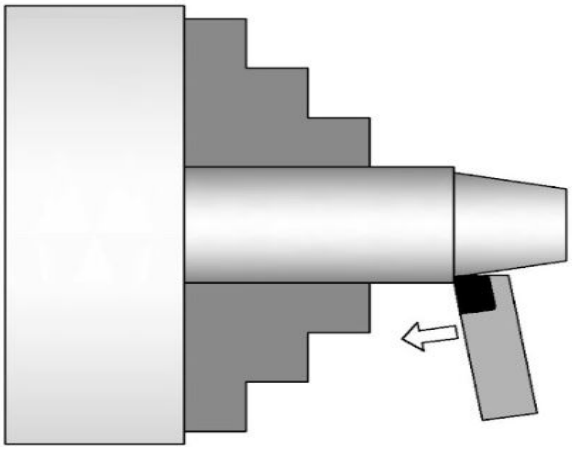

Taper Turning

Drilling

Holes that are axially located in cylindrical parts are produced by drilling operation, using a twist drill. For this, the work piece is rotated in a chuck or face plate. The tail stock spindle has a standard taper. The drill bit is fitted into the tail stock spindle directly or through drill chuck. The tail stock is then moved over the bed and clamped on it near the work. When the job rotates, the drill bit is fed into the work by turning the tail stock hand wheel.

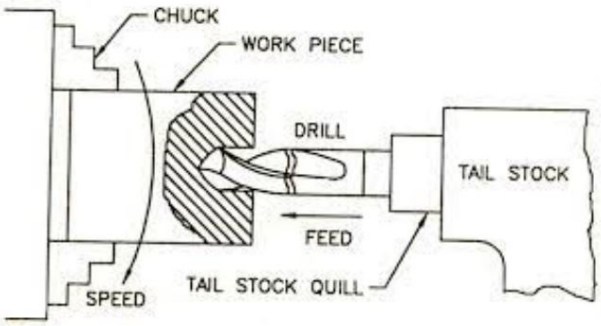

Drilling

Knurling

It is the process of embossing a diamond shaped regular pattern on the surface of a work piece using a special knurling tool. This tool consists of a set of hardened steel rollers in a holder with the teeth cut on their surface in a definite pattern. The tool is held rigidly on the tool post and the rollers are pressed against the revolving work piece to squeeze the metal against the multiple cutting edges. The purpose of knurling is to provide an effective gripping surface on a work piece to prevent it from slipping when operated by hand.

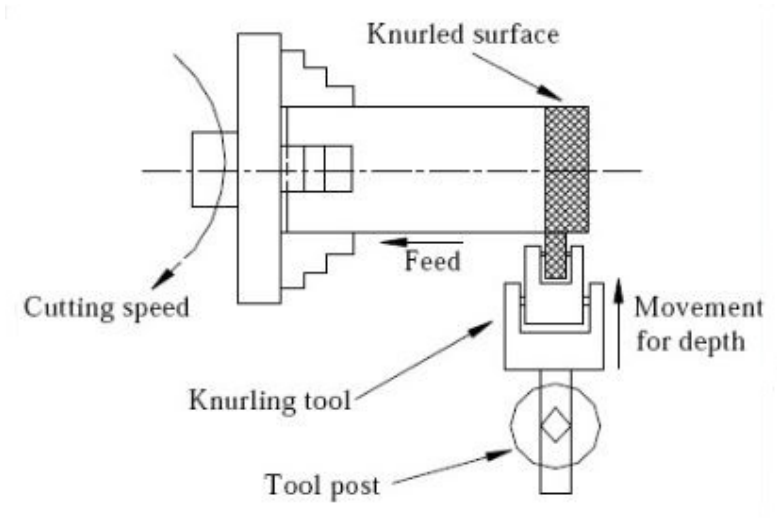

Knurling

Chamfering

It is the operation of beveling the extreme end of a work piece. Chamfer is provided for better look, to enable nut to pass freely on threaded work piece, to remove burrs and protect the end of the work piece from being damaged.

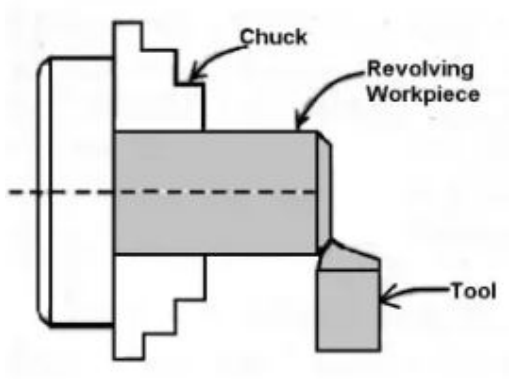

Chamfering

Threading

Threading is nothing but cutting helical groove on a work piece. Threads may be cut either on the internal or external cylindrical surfaces. A specially shaped cutting tool, known as thread cutting tool, is used for this purpose. Thread cutting in a lathe is performed by traversing the cutting tool at a definite rate, in proportion to the rate at which the work revolves.

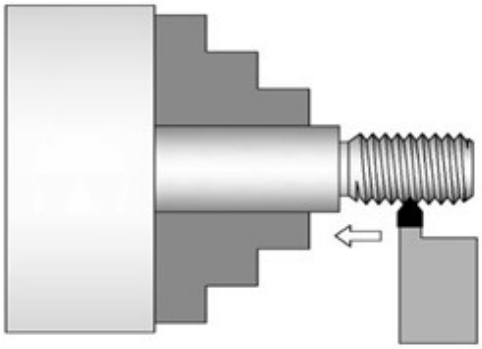

Threading

Parting Operations

Parting uses a blade-like cutting tool plunged directly into the workpiece to cut off the workpiece at a specific length. It is normally used to remove the finished end of a workpiece from the bar stock that is clamped in the chuck.

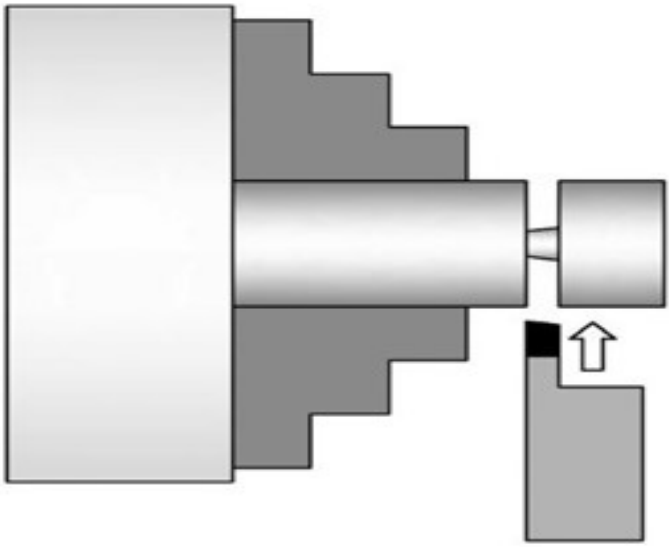

Parting

SAFETY PRECAUTIONS

1. Always wear eye protection preferably industrial quality safety glasses with side shields. The lathe can throw off sharp, hot metal chips at considerable speed as well as spin off spirals of metal that can be quite hazardous. Don't take chances with your eyes.
2. Wear short sleeve shirts, loose sleeves can catch on rotating work and quickly pull your hand or arm into harm's way.
3. Wear shoes preferably leather work shoes to protect your feet from sharp metal chips on the shop floor and from tools and chunks of metal that may get dropped.
4. Remove wrist watches, necklaces, chains and other jewelry. Tie back long hair so it can't get caught in the rotating work. Think about what happens to your face if your hair gets entangled.
5. Always double check to make sure your work is securely clamped in the chuck or between centers before starting the lathe. Start the lathe at low speed and increase the speed gradually.
6. Get in the habit of removing the chuck key immediately after use. Some users recommend never removing your hand from the chuck key when it is in the chuck. The chuck key can be a lethal projectile if the lathe is started with the chuck key in the chuck.
7. Keep your fingers clear of the rotating work and cutting tools. This sounds obvious, but I am often tempted to break away metal spirals as they form at the cutting tool.